General Purpose

Fixed

V-Block

Fixture

This fixture enables general purpose part measurement.

- Measurement Ranges:
  Model 283-10: 0.762 - 22.86 mm (0.030 - 0.900 in.)
  Model 283-20: 0.762 - 45.72 mm (0.030 - 1.800 in.)
  (The V-blocks are identical except for the thickness of the mounting spacers)
- Wrought steel V-block with 120° included angle
- V-block is hardened to Rockwell C 40-45
- Polycarbonate mounting spacers are used to reduce heat transfer and provide a measure of thermal isolation
- Working surfaces are ground flat and parallel to the bottom of the mounting base within 0.01 mm/per cm (0.001 in./per in.) or better

General Purpose Fixed V-Block

Part Number
283-10: 83855
283-20: 83854

BETA LaserMike

Dimensional Specifications

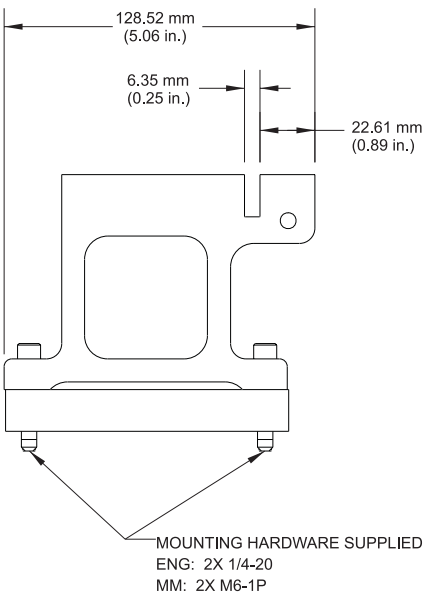

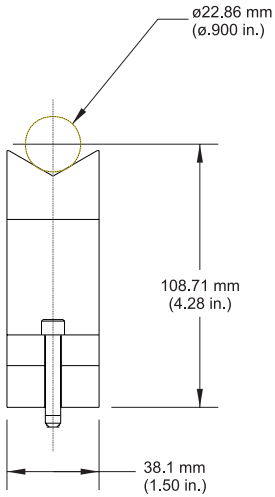

Beta LaserMike Corporate Offices

USA
8001 Technology Blvd.
Dayton, OH 45424
USA
Ph: +1 937 233 9935
Fax: +1 937 233 7284

Europe
Stirling Road
Cressex Business Park
High Wycombe,
Bucks HP12 3RT
Ph: +44 1494 89 44 00
Fax: +44 1494 89 44 01

Asia
2nd Floor Hankook
Tire Building
344 Kwangjang-Dong,
Kwangjin-Ku
Seoul 143-210 Korea
Ph: +82 2 444 9296
Fax: +82 2 444 9297

www.betalasermike.com

BETA LaserMike